EUROMAG INTERNATIONAL

Measure > Sense > Innovate

SENSOR

MUT2400EL

Electromagnetic flowmeter

The electromagnetic flowmeter designed for food industry

DS200-1-ENG

SENSOR
MUT2400EL

Electromagnetic flowmeter

The MUT2400EL is specifically designed for use in the food processing industry. It is made of materials approved by international regulations, compatible with the temperature and products required for sanitary reasons, and equipped with the attachments used today in the foodstuffs industry. The MUT2400EL sensors are manufactured with diameters from DN 25 to DN 100. The degree of protection is IP68 for a permanent submersion in water to a depth of 1.5 meters. The MUT2400EL allows to measure very low flow rates precisely and repeatable, even in difficult applications or with solid parts contained in the fluid.

This threaded sensor series bases its operation on the Faraday Principle, by which a conductor crossing a magnetic field generates a potential perpendicularly orientated to the same field. On top and on the lower part of the stainless steel AISI 304 flow tube, two coils are installed; the magnetic field generated by the electric current crossing the coils, induces in the electrodes a difference in the potential proportional to the flow rate.

Connections and Internal lining:

The MUT2400EL sensors are manufactured completely in stainless steel AISI 304 with an internal liner of PTFE. The connections can be TRICLAMP, DIN11851 or SMS1146. The internal PTFE conform to the norms WRAS, FDA, DPR 777/82 e DM 21/09/773.

Electrodes:

The standard electrodes are in Hastelloy C and therefore this guarantees a wide compatibility with process fluids. If required, they may be supplied in Hastelloy B, Titanium, Tantalum. A partially empty tube detection is available and can be enabled or disabled through the software.

SENSOR
MUT2400EL

Electromagnetic flowmeter

Coupling and connection to the sensor:
The MUT2400EL sensors may be coupled to MC608A or MC608P converters. In the separate version the sensor is connected to the converter through a cable whose maximum length will not exceed 100.

No pressure drop :
The electro-magnetic flowmeters do not have any moving internal parts, thus they have a very low pressure drop. The MUT2400EL flowmeters, does not have any restriction to the flow, allowing almost no pressure drop even when measuring viscous liquids or containing solid parts.

Calibration and maximum error:
The MUT2400EL sensors belong to the reference Group B1 (ISO 11631). Each sensor is calibrated by an hydraulic bench equipped with a reference weighting system and ACCREDIA certified.
The uncertainty of the calibration is equal to 0.2% +/- 2 mm/s.
The repeatability is in the order of 0.1%.
Bi-directional measure.

Standards reference:
The Euromag magnetic meters are marked CE and are manufactured according to the following standards:

- 2014/35/EU - EN 61010-1:2013 (LVD)
- 2014/30/EU - EN 61326-1:2013 (EMC)
- European directive 2014/32/EU (MID) (Pending)
- 2014/34/UE - IEC 60079 - 0, IEC 60079 - 18 (ATEX - IECEx) Separate version
- EHEDG (Pending)
- PTFE conform to the norms WRAS, FDA, DPR 777/82 e DM 21/09/773

Applications:
- Food & Beverage
- Chemicals
- Pharmaceutical
- Dosing applications

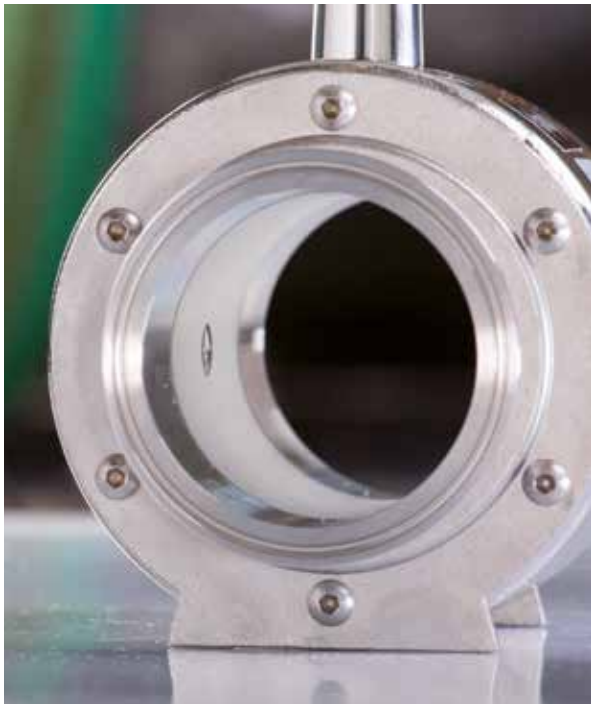

SENSOR
MUT2400EL

Electromagnetic flowmeter

Advantages:

- No moving parts
- No parts inside of the flowmeter
- No obstruction on the flow tube
- No pressure loss
- Long lasting stability and precision
- No filter needed, zero maintenance
- Resistance to periodic sanitary cleaning
- Extremely sturdy structure
- A dedicated Robot welds all the parts
- Internal parts protected by a bi-component resin in order to increase protection from external agents
- Bi-directional measure

Technical features:

Flow tube material		AISI 304					AISI 316 (optional)				
Connections material		AISI304						AISI 316 (optional)			
Available electrodes		Hastelloy C (standard)				Hastelloy B		Titanium		Tantalum	
Internal lining		PTFE for food									
Liquid temperature		Separate -40°C / + 130°C (180°C optional) / Compact -25C° / + 80C°									
Available diameters	**mm**	25	32	40	50	65	80	100			
	inches	1″	1 ¼″	1 ½″	2″	2 1/2″	3″	4″			
Standard connections		Triclamp									
Other connections available		DIN 11851 Female					SMS 1146 Female				
Standard operation pressure		16 bar with Triclamp / 25 Bar with DIN or SMS									
Number of electrodes		2 Standards – 3rd electrode for empty pipe alarm as option									
Installation requirements/conditions		U5 – D3									
Protection Degree		IP68 permanent submersion at 1,5 m (EN 60529)									
Convertes compatibility		MC608A/P									
Electrical connections		Cableglands M20 x 1.5 + terminal box (aluminum std, polycarbonate optional) + sealing resin									
Hygienic		FDA approved materials – EHEDG Pending									

SENSOR
MUT2400EL

Electromagnetic flowmeter

Characteristics and process connections:

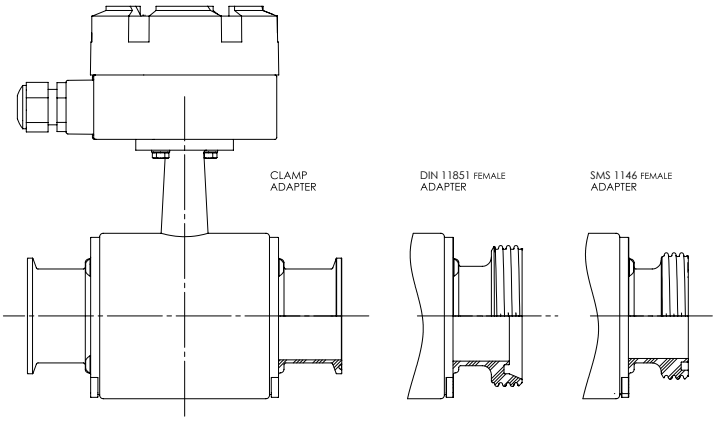

Size DN	Size Inches	TriClamp	DIN11851	SMS1146
25	1	∅ 50,4	Rd 52 x 1/6”	Rd 40 x 1/6”
32	-	-	Rd 58 x 1/6"	-
40	1” 1/2	∅ 64	Rd 65 x 1/6”	Rd 60 x 1/6”
50	2	∅ 64	Rd 78 x 1/6”	Rd 70 x 1/6”
65	2” 1/2	∅ 77,5	Rd 95 x 1/6”	Rd 85 x 1/6”
80	3”	∅ 91	Rd 110 x 1/4”	Rd 98 x 1/6”
100	4”	∅ 119	Rd 130 x 1/4”	Rd 132 x 1/6”

TriClamp Process connection:

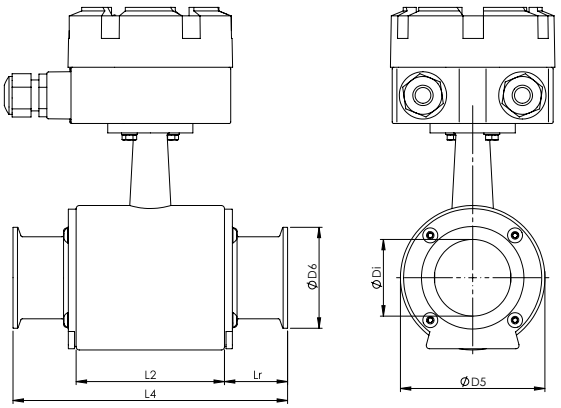

Size DN	Size Inches	L4 (mm)	L2 (mm)	Lr (mm)	D5 (mm)	Di (mm)	D6 (mm)
25	1	150 (+1/-3)	76	37,5	75	22,6	50,4
40	1” 1/2	157 (+1/-3)	86	36	75	37,6	64 / 50.4
50	2	174 (+1/-3)	94	40	92	48,6	64
65	2” 1/2	194 (+1/-3)	100	47	107	60,3	77,5
80	3”	200 (+1/-3)	107	47	130	73	91
100	4”	216 (+1/-3)	120	48	150	97,6	119

DIN 11851 Process connection:

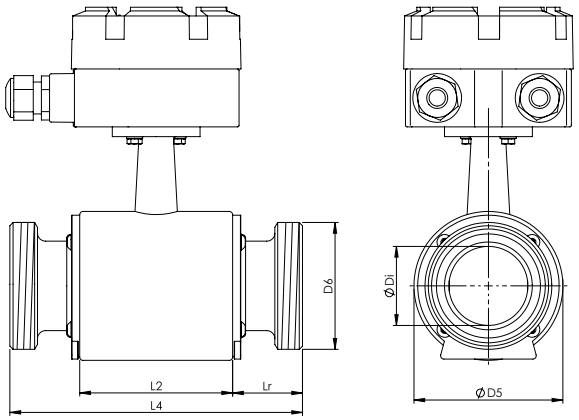

Size DN	Size Inches	L4 (mm)	L2 (mm)	Lr (mm)	D5 (mm)	Di (mm)	D6 (mm)
25	1	150 (+1/-3)	76	37	75	22,6	Rd 52 x 1/6"
32	-	236 (+1/-3)	76	80	75	22,6	Rd 58 x 1/6"
40	1" 1/2	157 (+1/-3)	86	41	75	37,6	Rd 65 x 1/6"
50	2	180 (+1/-3)	94	43	92	48,6	Rd 78 x 1/6"
65	2" 1/2	196 (+1/-3)	100	48	107	60,3	Rd 95 x 1/6"
80	3"	213 (+1/-3)	107	53	130	73	Rd 110 x 1/4"
100	4"	244 (+1/-3)	120	62	150	97,6	Rd 130 x 1/4"

SMS 1146 Process connection:

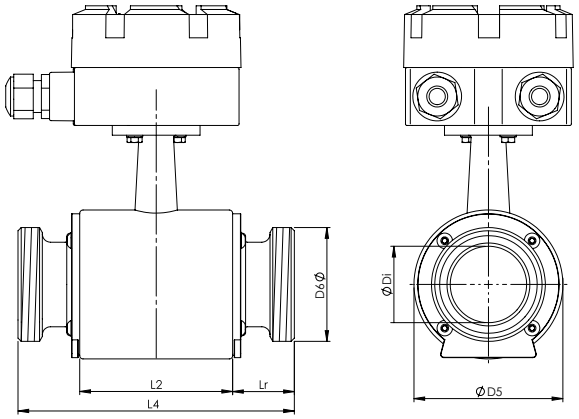

Size DN	Size Inches	L4 (mm)	L2 (mm)	Lr (mm)	D5 (mm)	Di (mm)	D6 (mm)
25	1	132 (+1/-3)	76	28	75	22,6	Rd 40 x 1/6"
38	1" 1/2	152 (+1/-3)	86	33	75	37,6	Rd 60 x 1/6"
51	2	160 (+1/-3)	94	33	92	48,6	Rd 70 x 1/6"
63	2" 1/2	174 (+1/-3)	100	37	107	60,3	Rd 85 x 1/6"
76	3"	181 (+1/-3)	107	37	130	73	Rd 98 x 1/6"
101	4"	200 (+1/-3)	120	40	150	97,6	Rd 132 x 1/6"

SENSOR
MUT2400EL

Electromagnetic flowmeter

Separate Version
Aluminium separation box

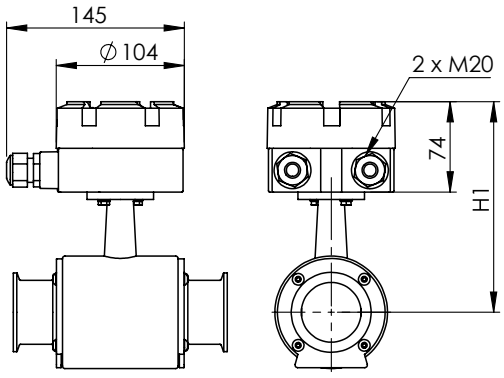

Compact Version with MC608A

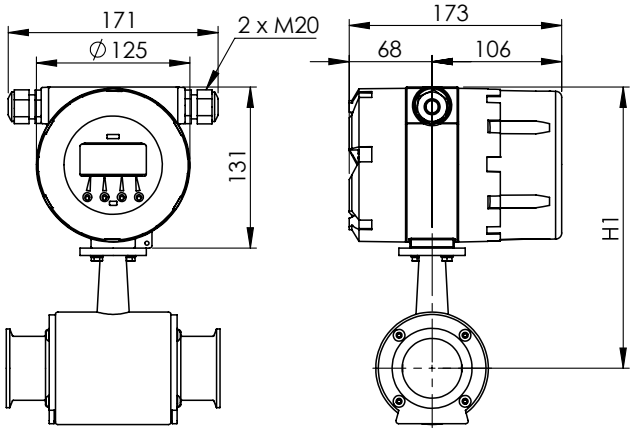

Separate Version
Policarbonate separation box

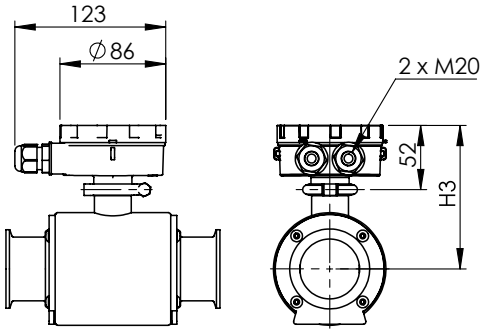

Compact Version with MC608A
Vertical policarbonate enclousure

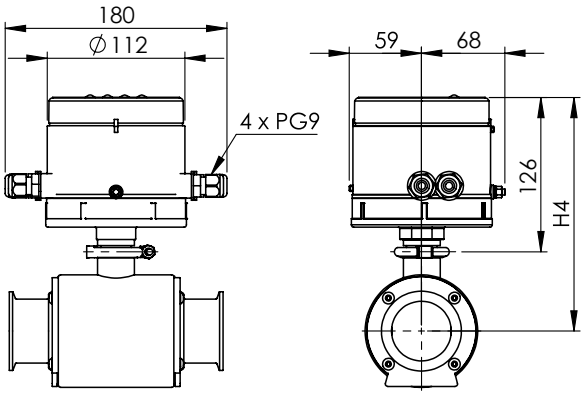

Size DN	Size Inches	H1 (mm)	H2 (mm)	H3 (mm)	H4 (mm)
25	1	163,5	220,5	108,2	182,2
32	-	163,5	220,5	108,2	182,2
40	1” 1/2	163,5	220,5	108,2	182,2
50	2	172	229	116,7	190,7
65	2” 1/2	179,5	236,5	124,2	198,2
80	3”	191	248	135,7	209,7
100	4”	201	258	145,7	219,7

DS200-1-ENG

gasweb.it

Measure > Sense > Innovate

EUROMAG INTERNATIONAL

Measure > Sense > Innovate

QUALITY SYSTEM CERTIFICATION DNV·GL ISO 9001

SCHIBUOLA LAURO

Via Nizza 65 10125 Torino - Italy

info@schibuola.com - www. schibuola.com