EUROMAG INTERNATIONAL

Electromagnetic flowmeters

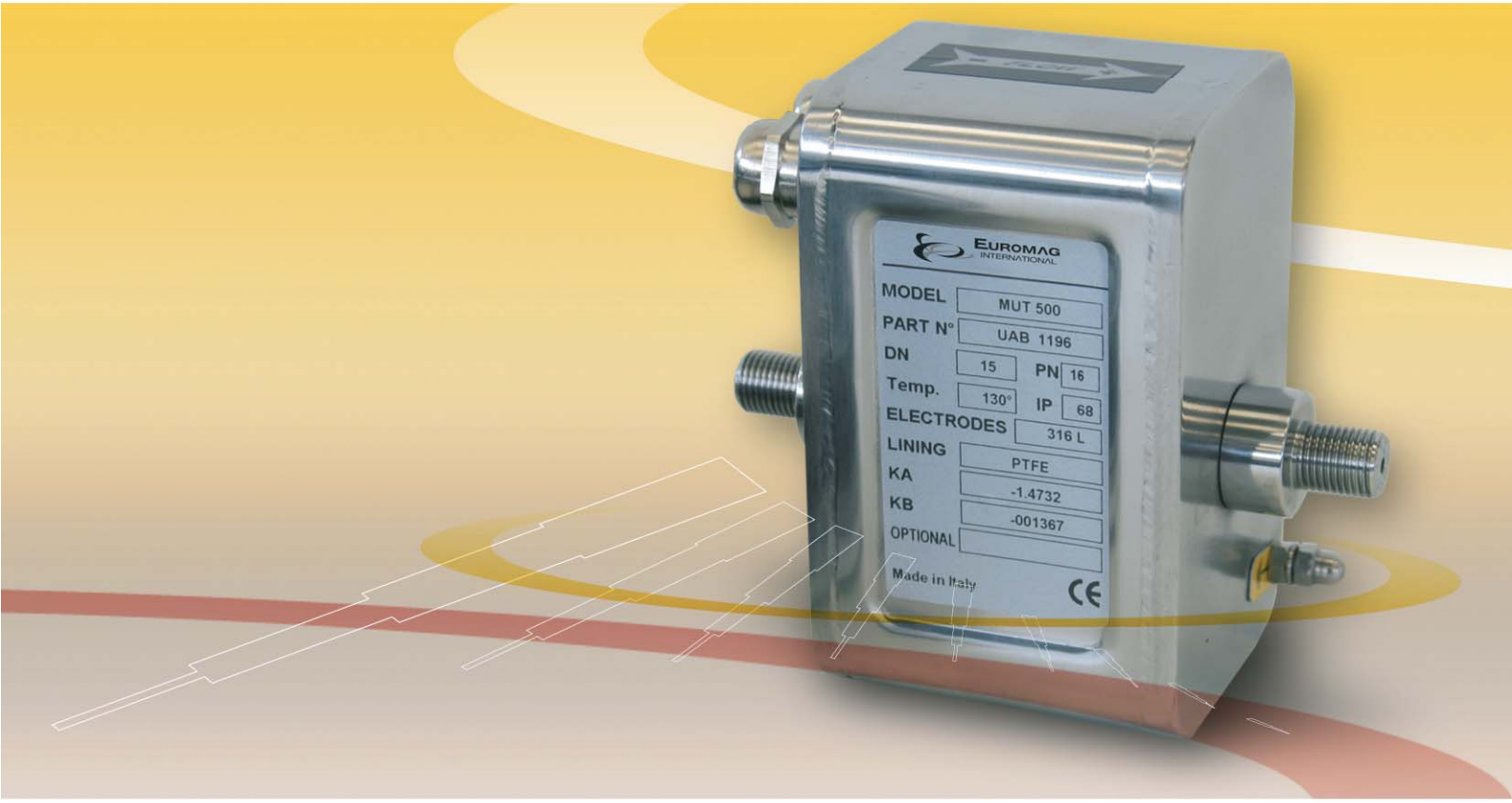

Sensor MUT 500

DS140-1-ENG

Sensor MUT 500

EUROMAG INTERNATIONAL MUT500 series are the most suitable for the measurement of small flow rates of liquids electrically conductive, for temperatures up to 160°C. They cover all diameters from DN 3 to DN 20 as shown in Table 1. The degree of protection is IP 68, for a 1.5 m permanent immersion in water. The flow tube is made in PTFE. The coils for the generation of the magnetic field are mounted on the external part of the flow tube, all enclosed in the stainless steel sensor body. Two measurement electrodes are placed at diametrically opposite points of the flow tube.

1. Connections and internal lining

The flow tube is made in PTFE and the case is in stainless steel AISI 304 (see Table 5). The connection may be UNI 338 male threaded, NPT, triclamp / ISO 2852 or DIN 11851. Table 3 illustrates the dimensions of the connections. Connections are made in AISI 316; on request, they may be supplied in Hastelloy B or C. In all cases the connections are in contact with the liquid; therefore only a grounding point for the sensor is required.

2. Electrodes.

The standard version has three electrodes in AISI 316 L, but on request, they may be supplied in the materials shown in Table 2.

3. Coupling and connecting to sensor

Sensors of the MUT500 series are coupled to all converters manufactured by EUROMAG INTERNATIONAL shown in Table 4. In the separate version the sensor is connected to the converter by means of two cables (C012 and C013) the length of which depends on the conductivity of the liquid, the maximum length not exceeding 100 meters, as shown in Diagram 1. The standard length for this type of version is 5 meters.

4. Choice of diameter

MUT500 can measure flow rates of up to 12.500 l/h. When choosing the diameter, we advise keeping at the full scale flow rate, a liquid velocity of at least 2÷3 m/s. The maximum acceptable velocity is 10 m/s. Figure 3 provides the flow rate for each DN (nominal diameter) according to the liquid velocity.

5. Maximum temperature of liquid

In the separate version the maximum liquid temperature allowed is shown in Table 5. In the compact version instead, the maximum temperature allowed depends on the ambient temperature. This is due to the required cooling of electronics.
In general a maximum liquid temperature of 80ºC shall be allowed for the compact version.

6. Calibration and maximum error

MUT500 belongs to the reference Group B1 (ISO 11631). Each sensor is calibrated by a hydraulic bench equipped with a reference weighting system and SIT certified. The uncertainty of the measure is equal to 0.2% of the read value, when the velocity of the liquid is more than 0.2 m/s. The repeatability of the measure is in the order of 0.1%.

7. Reference standards

The EUROMAG INTERNATIONAL magnetic meters are marked CE and are manufactured according to the following standards:
* CEI EN 61010-1
* UNI EN ISO 6817
* EN 1434
* EN 50081 - 1
* EN 50082 - 1
* 2006/95/CE, 93/68 (LVD)
* 2004/98/CE, 92/31 (EMC)

Maximum lenght of cables according to the liquid conductivity.

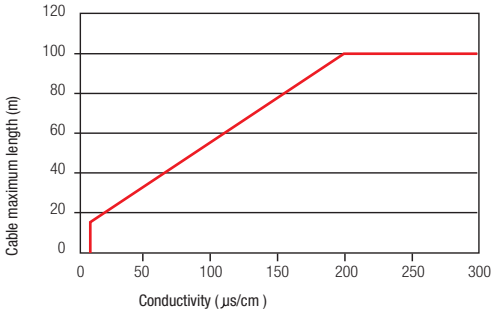

figure 1

Available electrodes

AISI 316 L
Hastelloy B
Hastelloy C

table 2

Standard diameter

millimeter (mm)	3	6	10	15	20
inches (")	1/8"	1/4"	3/8"	1/2"	3/4"

table1

Connections diameter

Nominal Diametre		Connections diameter		
		UNI 338/NPT	Triclamp / ISO 2852	DIN 11851
3 mm	1/8"	1/4"	51 mm	10 mm
6 mm	1/4"	3/8"	51 mm	10 mm
10 mm	3/8"	1/2"	51 mm	10 mm
15 mm	1/2"	3/4"	51 mm	15 mm
18 mm	3/4"	1"	51 mm	20 mm

table 3

Coupling converters

Versions of MUT500	MC 106 A	MC 106 B	MC 308	MC 308 C	MC 108	MC 608 A	MC 608 B
	[1]	[1]	[1] [2]	[2]	[2]	[2]	[2]
SEPARATE	●	●	●	●	●	●	●
COMPACT	●		●	●		●	●

[1] Case in abs [2] Case in alluminium [3] Case in stainless steel

table 4

Internal pipe	Liquid temperature
PTFE	- 20°C ÷ +160°C [1]

[1] For the compact version Tmax = 80°C

table 5

Overall dimensions.

Type of joints	L (mm)
UNI338/NPT	130
Triclamp / ISO 2852	127
DIN	136

All other dimensions shown are identical for all sensors of the MUT500 series.

table 6

Fig. 2.1 - Threaded Joints UNI 338 / NPT

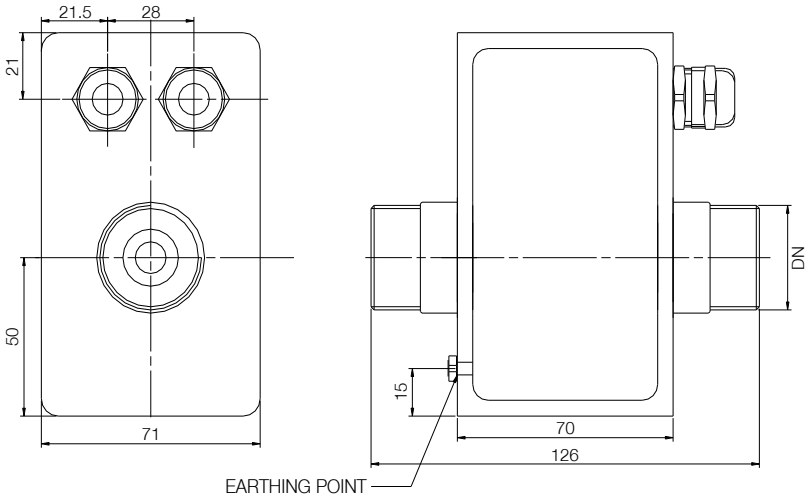

Fig. 2.2 - Threaded Joints DIN 11851

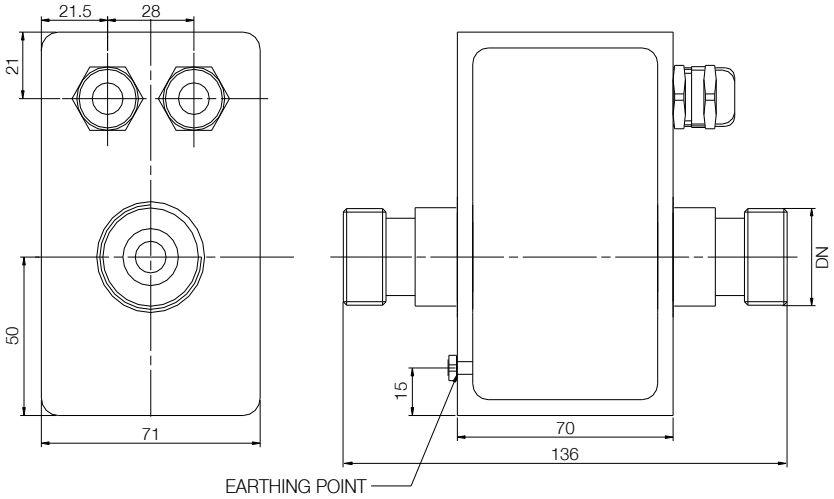

Fig. 2.3 - Triclamp / ISO 2852 Joints

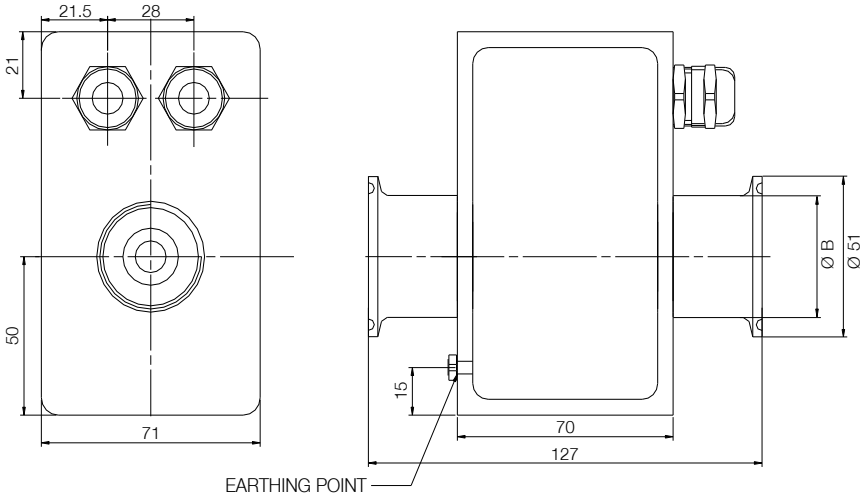

DN	B
3 mm	25.4
6 mm	25.4
10 mm	25.4
15 mm	38.0
20 mm	38.0

table 7

Sensors MUT500

Available diameters	3 mm 1/8"	6 mm 1/4"	10 mm 3/8"	15 mm 1/2"	20 mm 3/4"		
Connections	Male trheaded joint UNI 338		NPT-M	Triclamp	DIN 11851		
Nominal pressure	16 bar						
Liquid temperature (constant)	-20°C a +160°C [1]						
Degree of protection	IP68 continuous inmersion at 1,5 m						
Compatibility of converters	MC 106 A	MC 106 B	MC 308	MC 308 C	MC 108	MC 608 A	MC 608 B
Dimensions	See figure 2						
Parts in contact with the liquid	Flow tube: PTFE			Gasket: Viton [2]			
Weight [3]	1,9 kg						

[1] For the compact version Tmax = 80°C

table 8

[2] Others on request.

[3] Maximum weight of sensor without cables.

Fig. 3 - Flowrate values according to the liquid velocity for all available diameters.

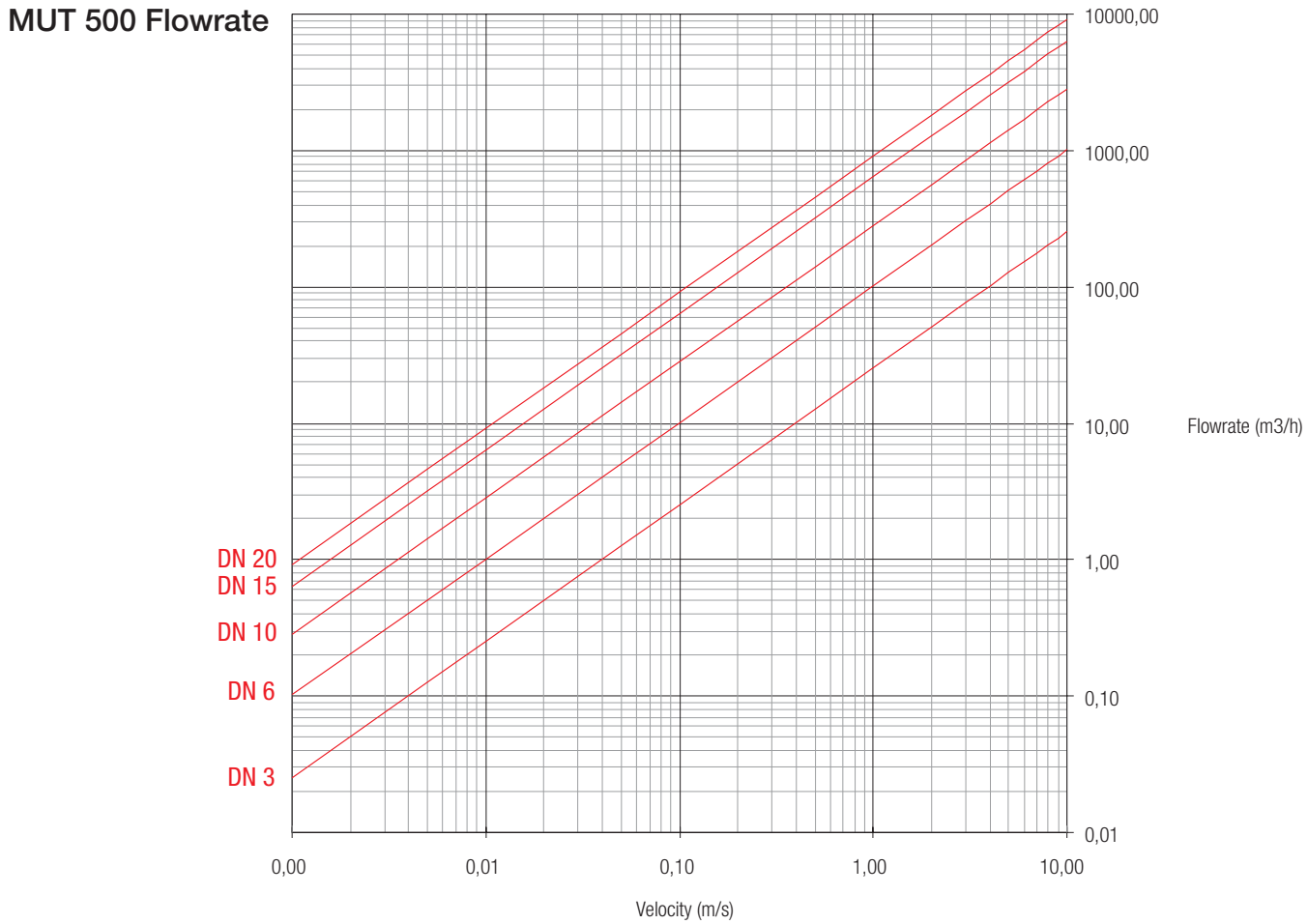

SCHIBUOLA LAURO

Via Nizza 65 10125 Torino - Italy

info@schibuola.com - www. schibuola.com

The data shown in this catalogue are subject to modification without prior notice.

COMPANY WITH
QUALITY SYSTEM
CERTIFIED BY DNV
= ISO 9001 =

QUALITY SYSTEM CERTIFICATION
ISO 9001
DNV